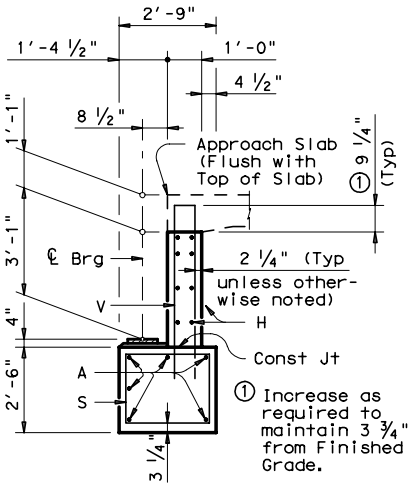

Example Showing Section
With Approach Slab

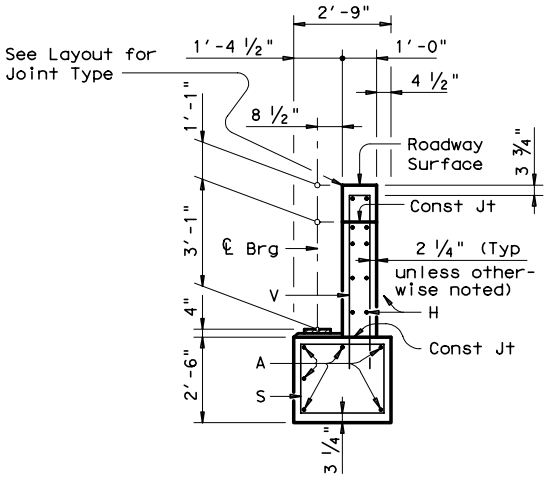

Example Showing Section
Without Approach Slab

Fig. 3-11