1. Skew accurately shown
2. Reinforcing accurately shown
3. Critical dimensions and cover
4. Special corner reinforcing

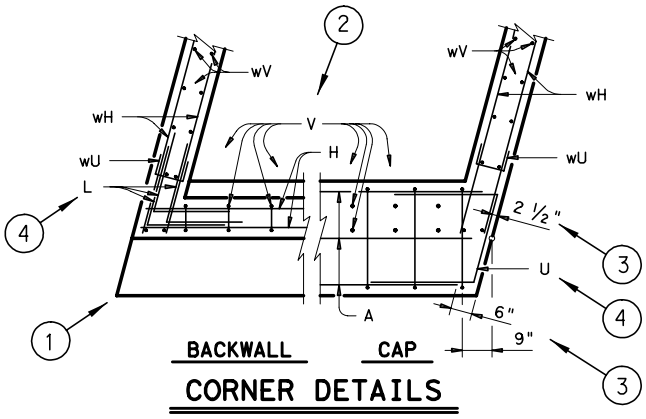

Fig. 3-16