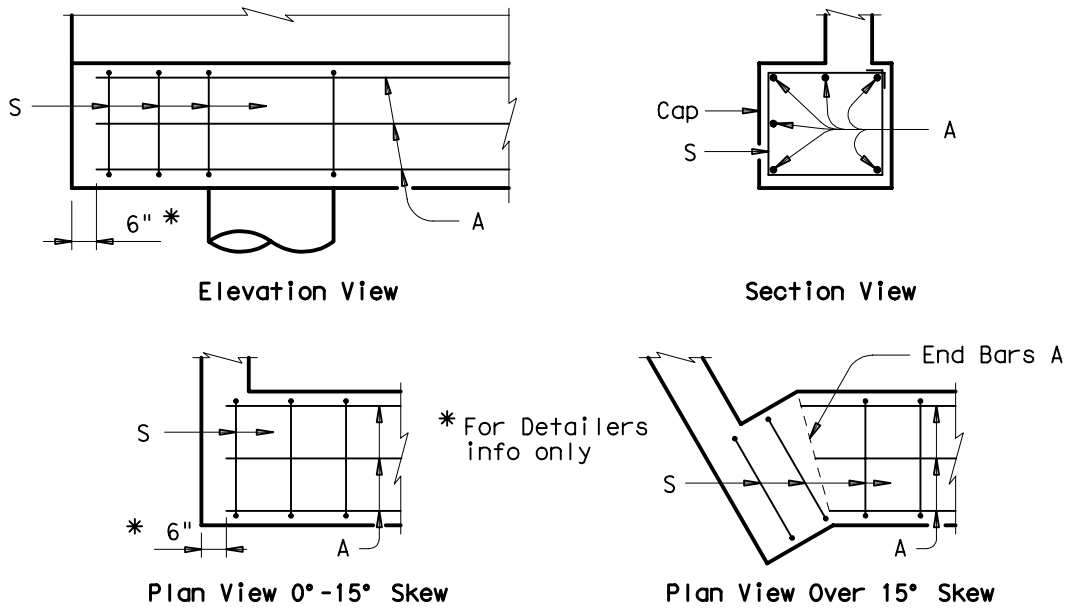
S
6" *
A
Elevation View
Cap
S
A
Section View
S
* 6"
A
Plan View 0°-15° Skew
* For Detailers
info only
End Bars A
S
A
Plan View Over 15° Skew

Fig. 3-17