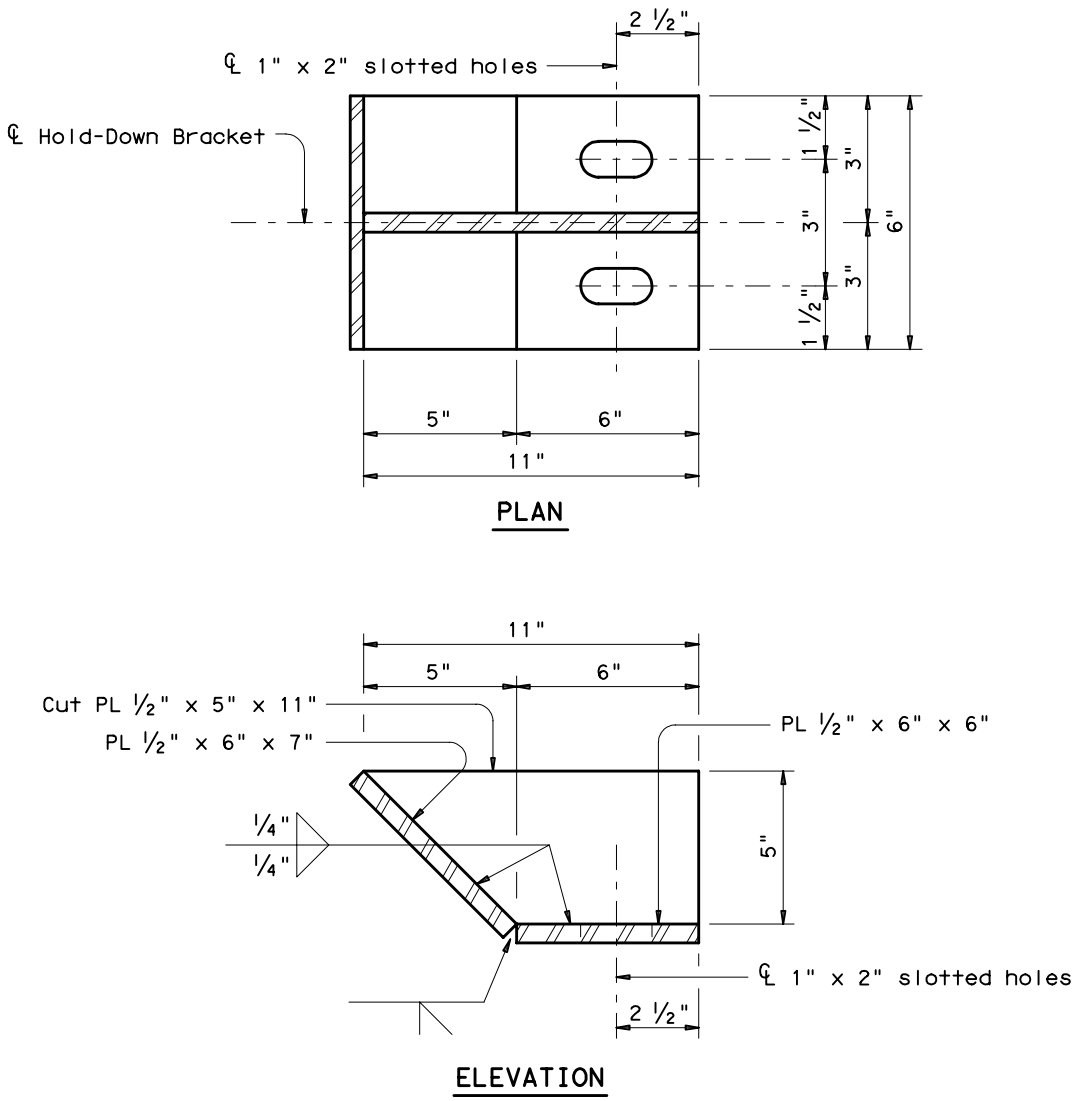

HOLD-DOWN BRACKET

Fig. 3-32