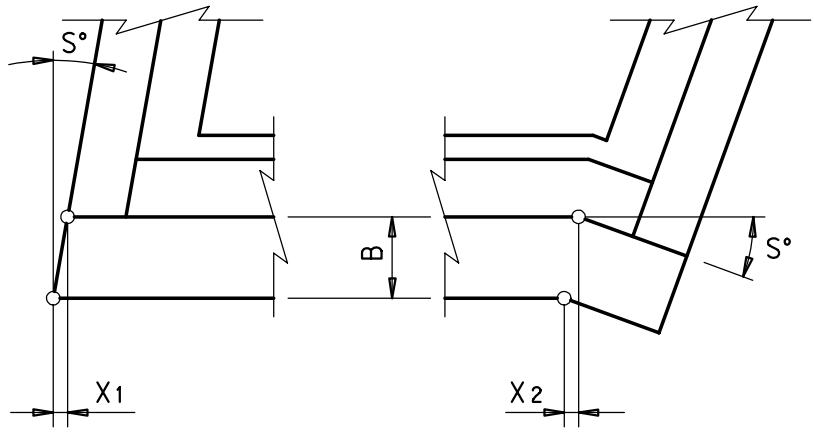


$X_1$ = (B) x (Tan Skew S°)
$X_2$ = (B) x (Tan 0.5 Skew S°)

**Skew S° = 0° Through 15°** **Skew S° = Over 15°**

Fig. 3-4