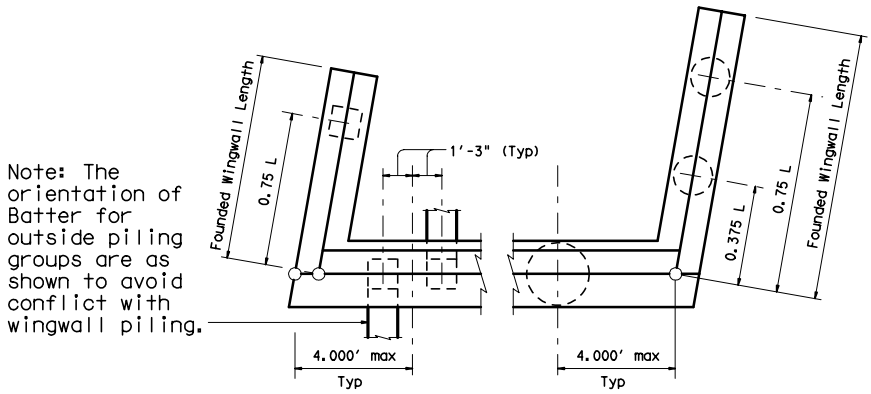

Skew = 0° Through 15°

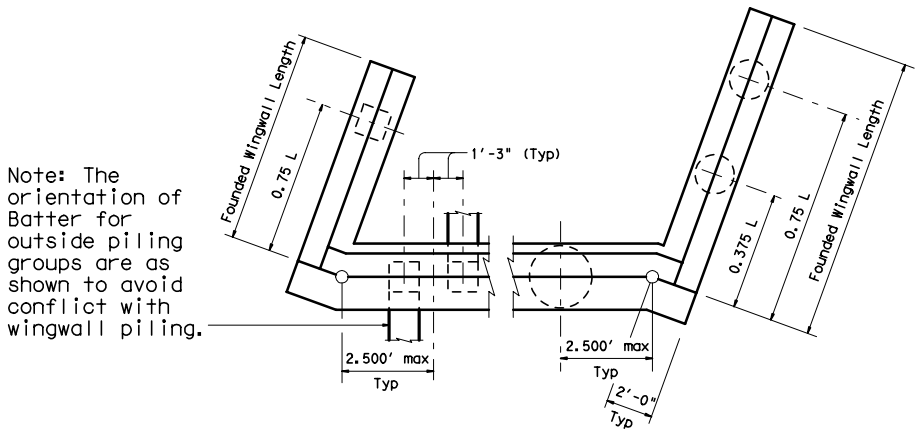

Skew = Over 15°

Fig. 3-6