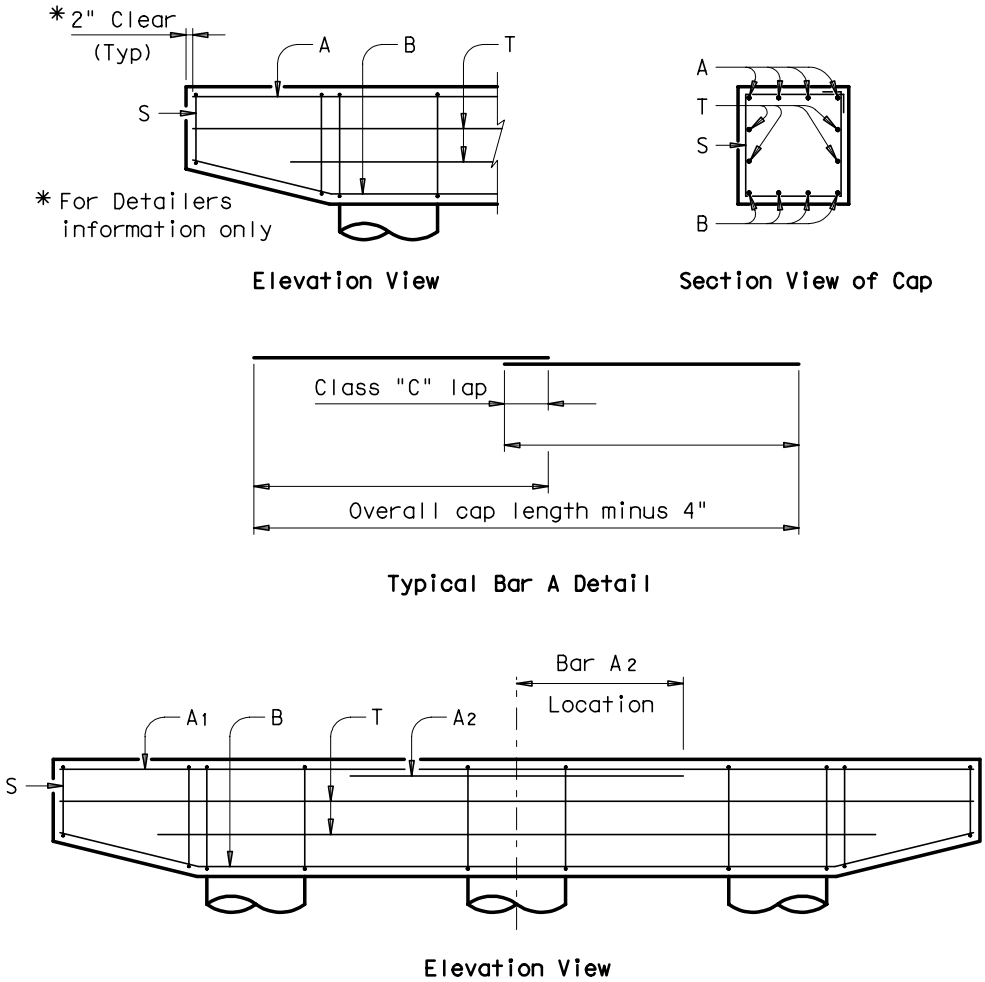
* 2" Clear
(Typ)
A
B
T
S
* For Detailers
information only
Elevation View
A
T
S
B
Section View of Cap
Class "C" lap
Overall cap length minus 4"
Typical Bar A Detail
Bar A2
Location
A1
B
T
A2
S
Elevation View

Fig. 4-16