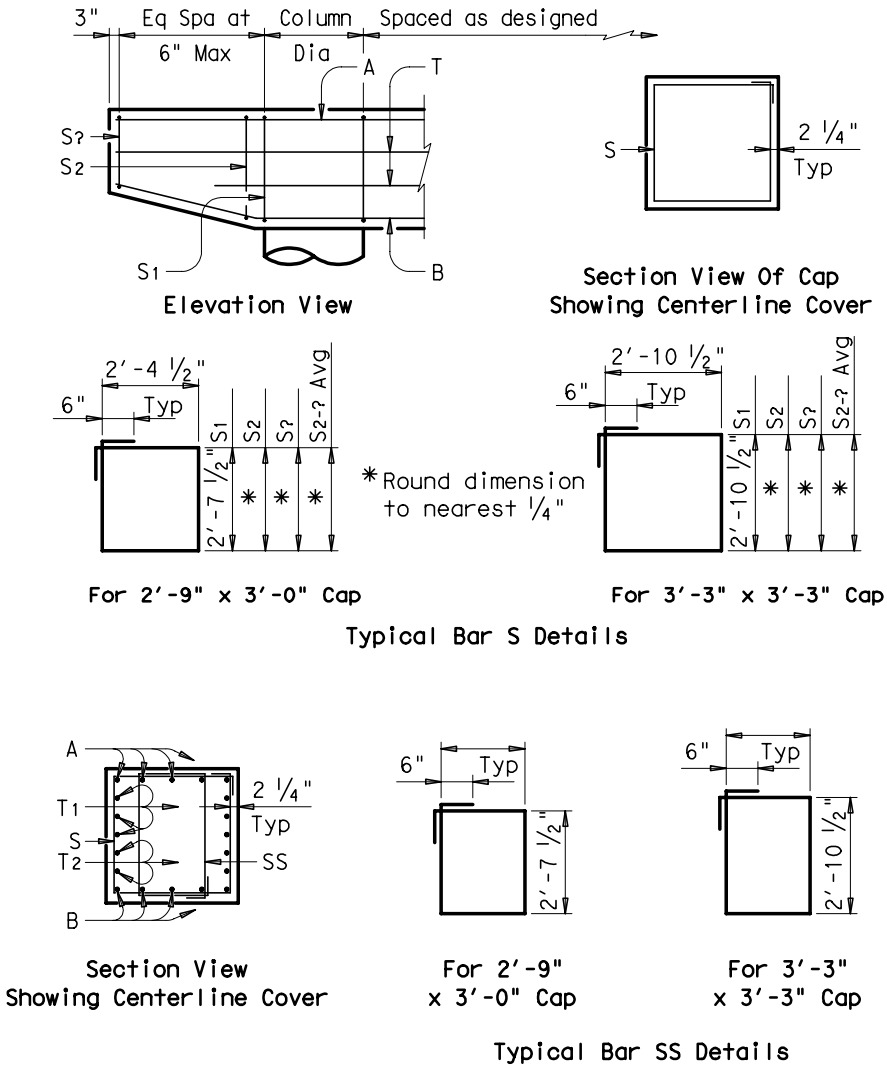
3"
Eq Spa at
6" Max
Column
Dia
Spaced as designed
A
T
S?
S2
S1
B
Elevation View
S
2 1/4"
Typ
Section View Of Cap
Showing Centerline Cover
2'-4 1/2"
6"
Typ
S1
S2
S?
S2-? Avg
2'-7 1/2"
*
*
*
*Round dimension
to nearest 1/4"
2'-10 1/2"
6"
Typ
S1
S2
S?
S2-? Avg
2'-10 1/2"
*
*
*
For 2'-9" x 3'-0" Cap
For 3'-3" x 3'-3" Cap
Typical Bar S Details

A
T1
S
T2
B
2 1/4"
Typ
SS
Section View
Showing Centerline Cover
6"
Typ
2'-7 1/2"
For 2'-9"
x 3'-0" Cap
6"
Typ
2'-10 1/2"
For 3'-3"
x 3'-3" Cap
Typical Bar SS Details

Fig. 4-18