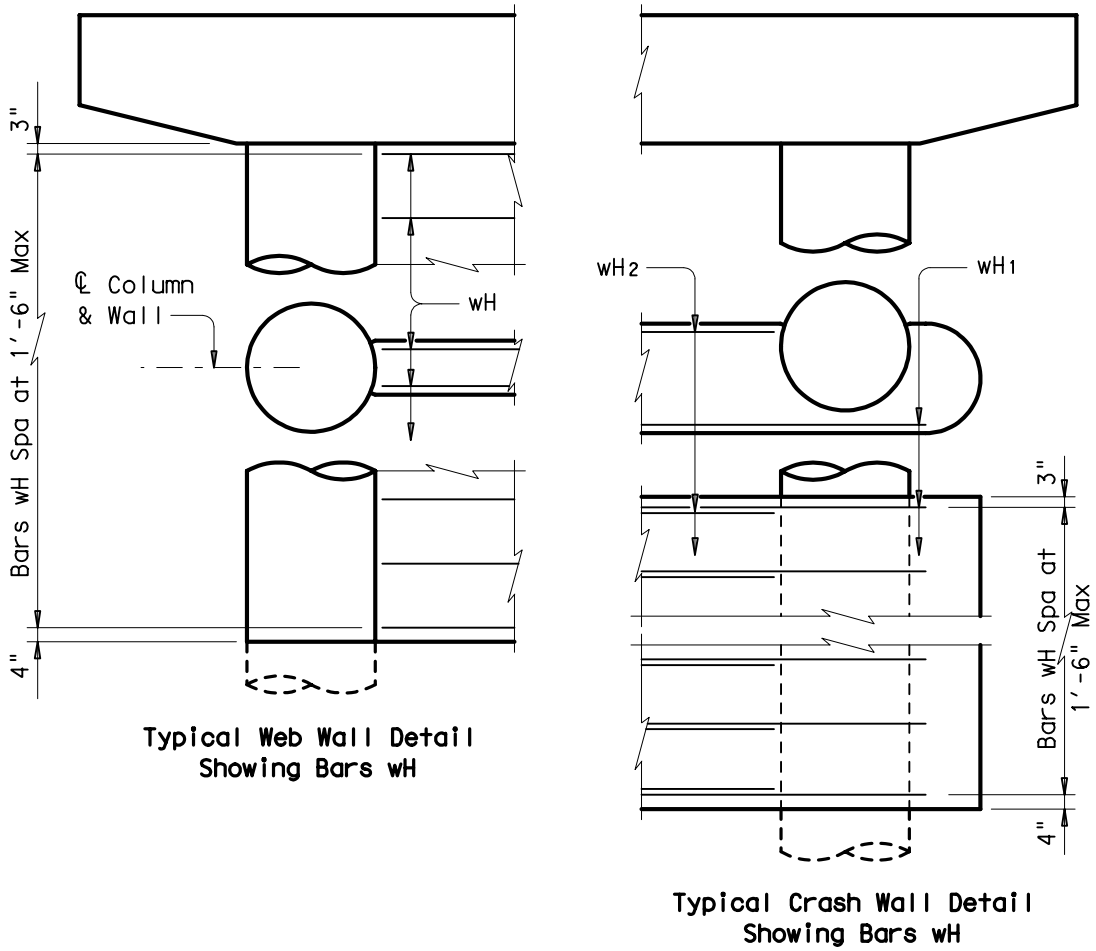
3"
Bars wH Spa at 1'-6" Max
4"
℄ Column
& Wall
wH
Typical Web Wall Detail
Showing Bars wH
wH2
wH1
3"
Bars wH Spa at
1'-6" Max
4"
Typical Crash Wall Detail
Showing Bars wH

Fig. 4-24