Note: Shown for Type A, B and C Bms. Replace 1'-0" dimensions with 1'-2" for Type IV Bms.

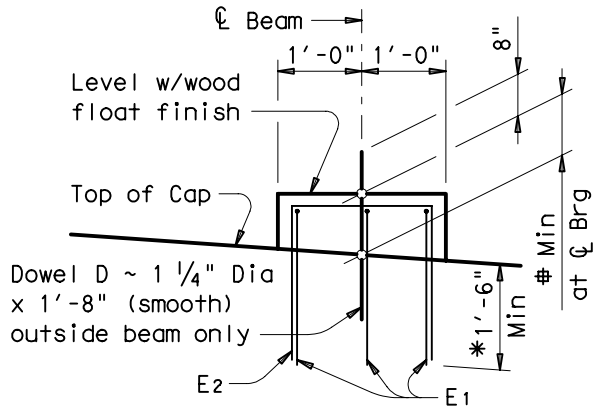

As directed by the Engineer

* For Detailers information only

PEDESTAL ELEVATION

(Bearing surface shall be clean and free of all loose material before placing bearing pad.)

Fig. 4-33