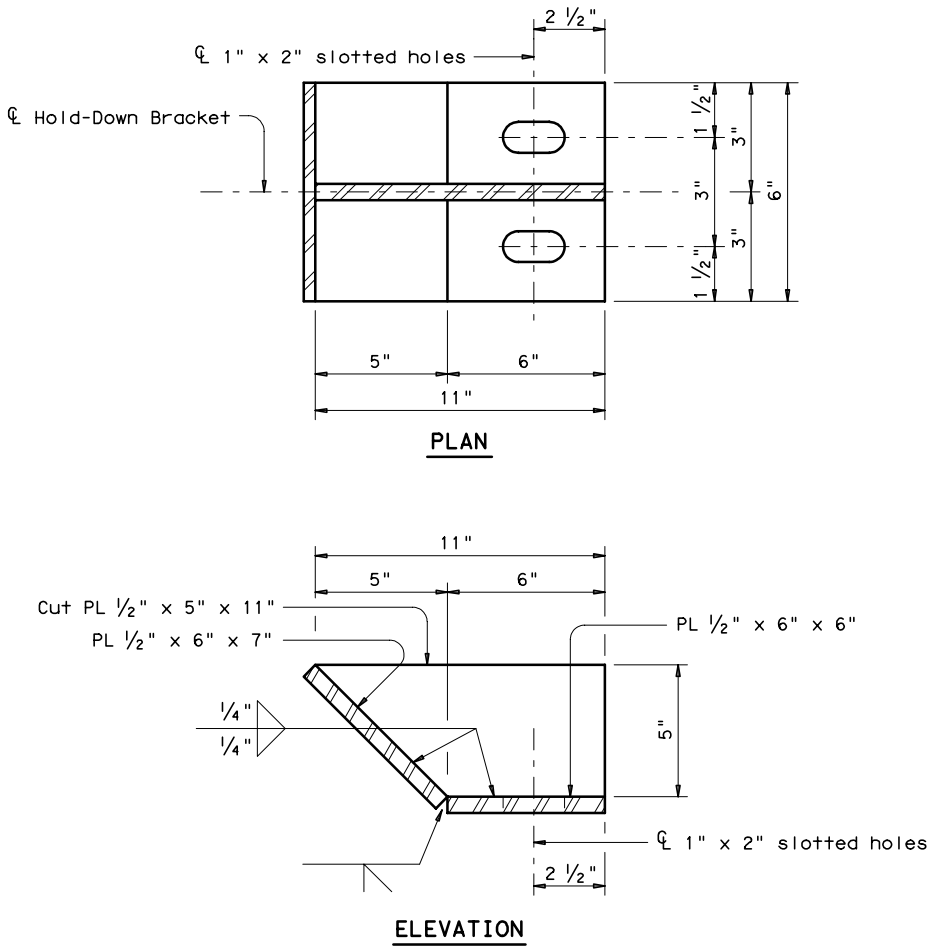

HOLD-DOWN BRACKET

Fig. 4-36