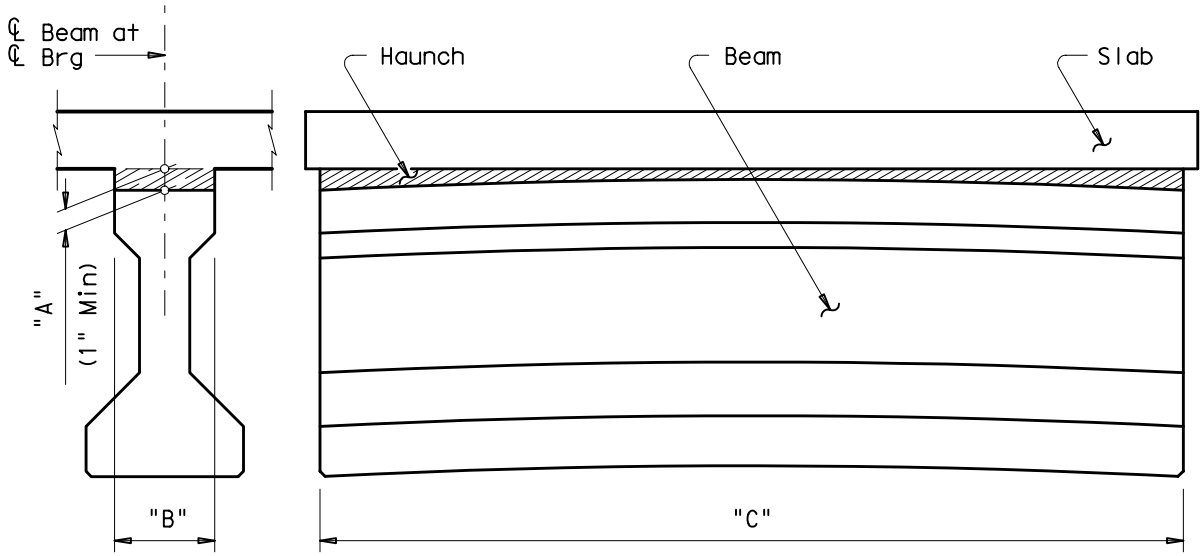

"A" = Haunch at Centerline of Brg
"B" = Beam Top Flange Width
"C" = Beam Top Flange Length

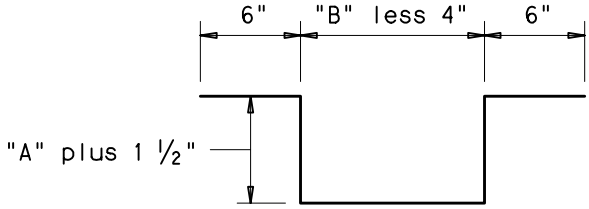

Bars U

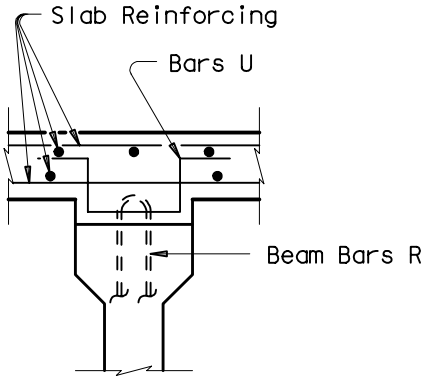

Note:
Bars U spacing shall normally match Beam Bars R spacing.
Bars U shall normally be #4.

Fig. 5-17