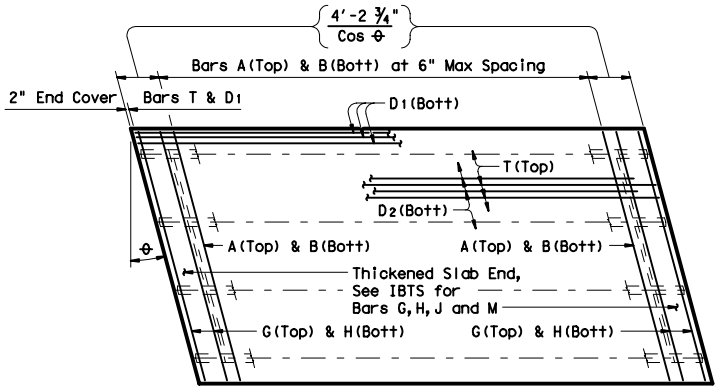

Skews 15° and Under

Transverse reinforcing spaced at 6" Max parallel to the skew. Bar spacing for longitudinal reinforcing shall be dimensioned on the Typical Transverse Section.

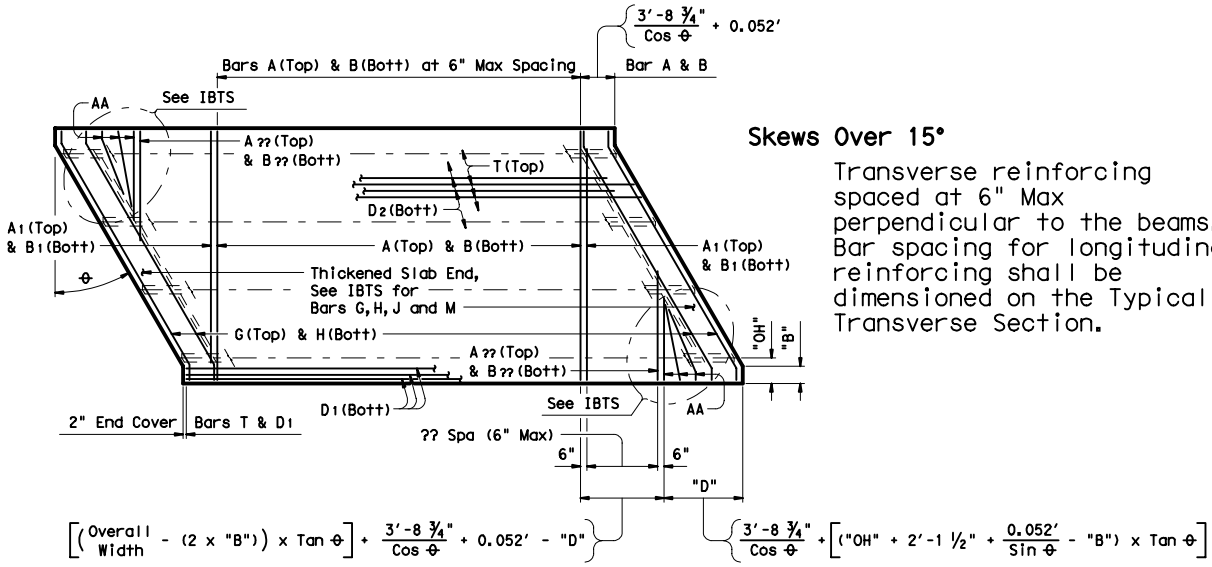

Skews Over 15°

Transverse reinforcing spaced at 6" Max perpendicular to the beams. Bar spacing for longitudinal reinforcing shall be dimensioned on the Typical Transverse Section.

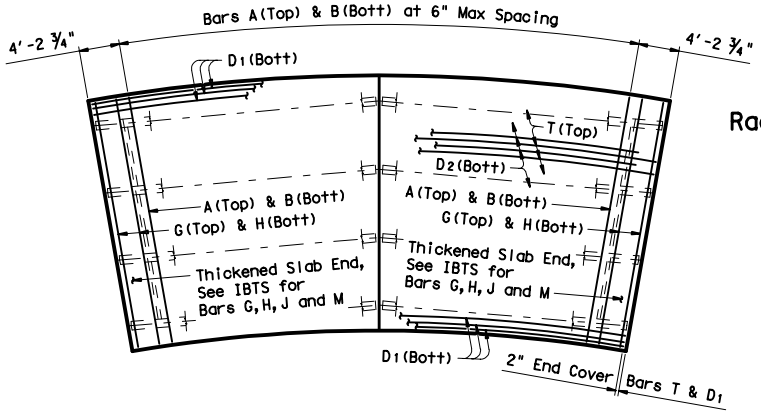

Radial Slabs

Transverse reinforcing spaced at 6" Max radially along the longest edge of curved slab or unit. Bar spacing for longitudinal reinforcing shall be dimensioned on the Typical Radial Section.

Fig. 5-18