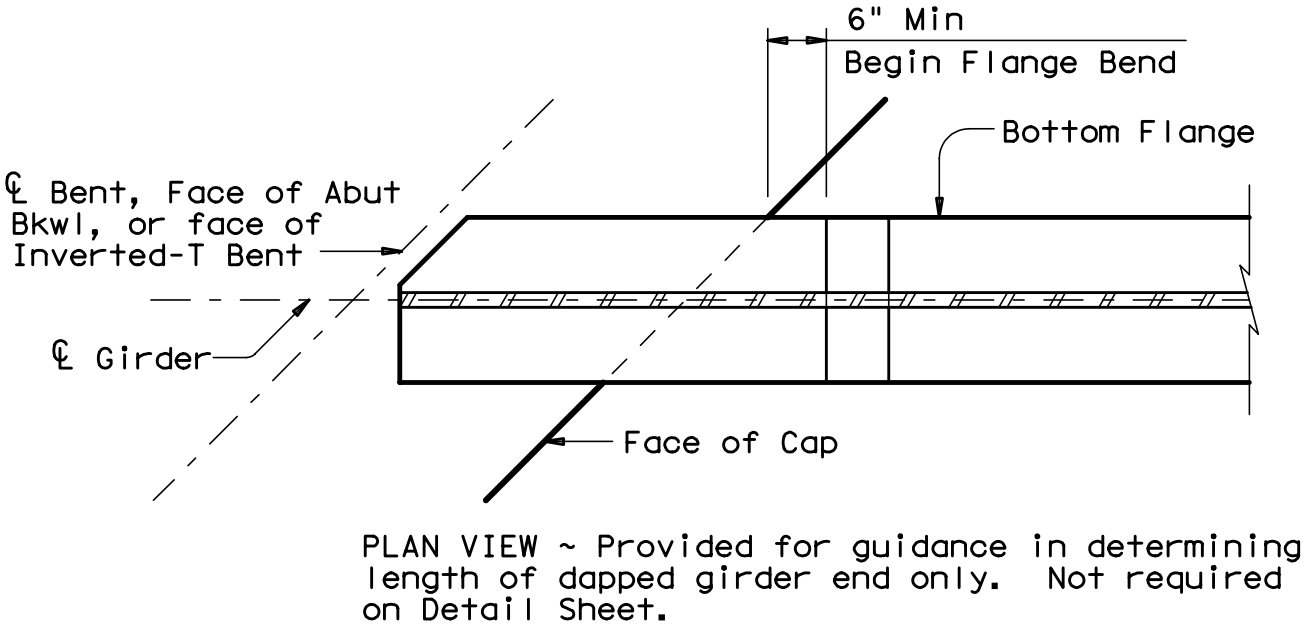
6" Min
Begin Flange Bend
Bottom Flange
℄ Bent, Face of Abut
Bkwl, or face of
Inverted-T Bent
℄ Girder
Face of Cap
PLAN VIEW ~ Provided for guidance in determining
length of dapped girder end only. Not required
on Detail Sheet.

Fig. 6-21