Federal Review and Approval Process for MTP Air Quality Conformity (Document Flow)

Transmittal of Conformity Documentation

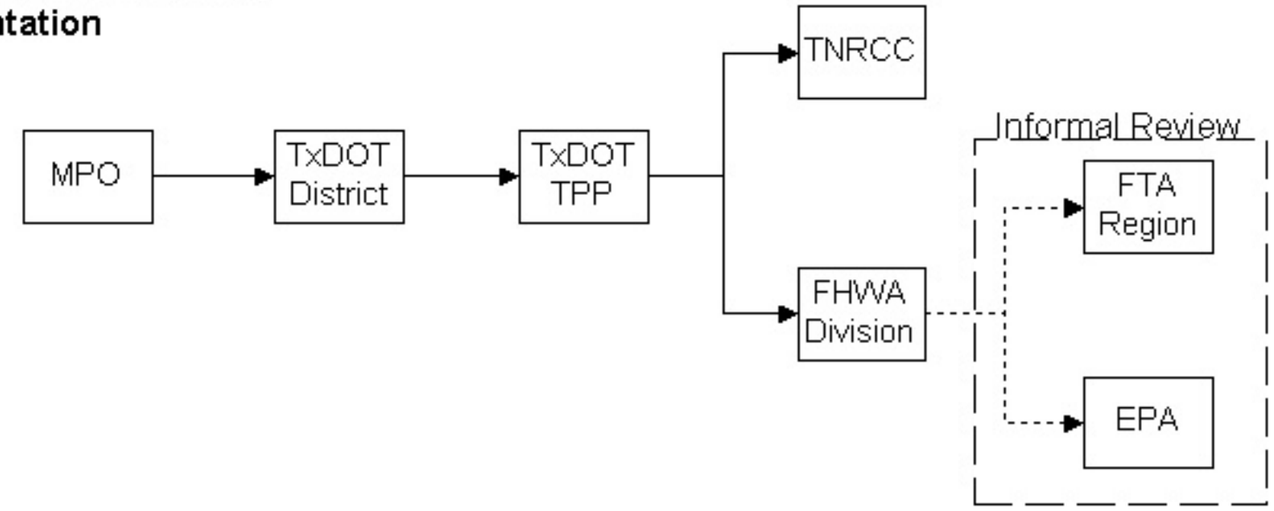

TNRCC has a maximum of 30 days to review documents

Transmittal of TNRCC Comments

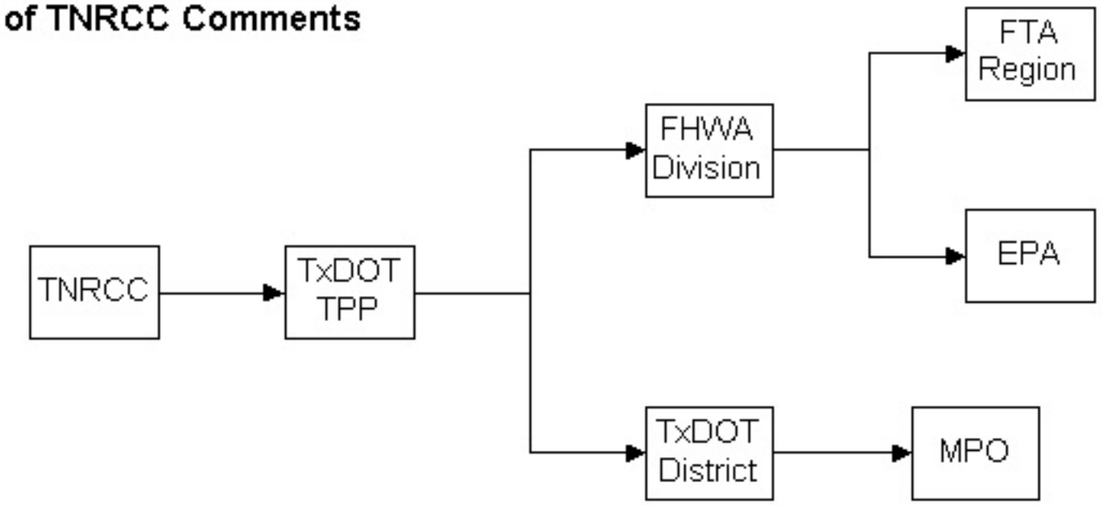

EPA has a maximum of 30 days to review documents
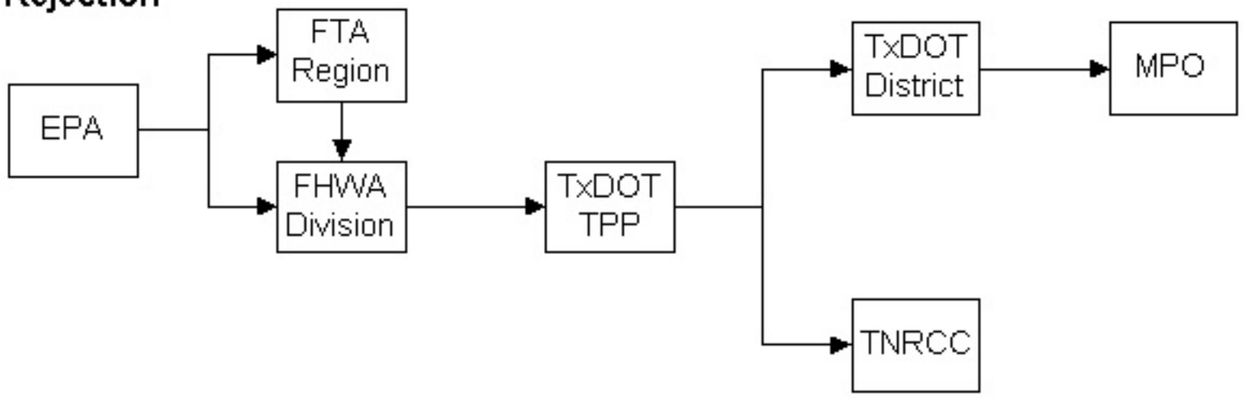
Transmittal of Federal Approval/ Rejection