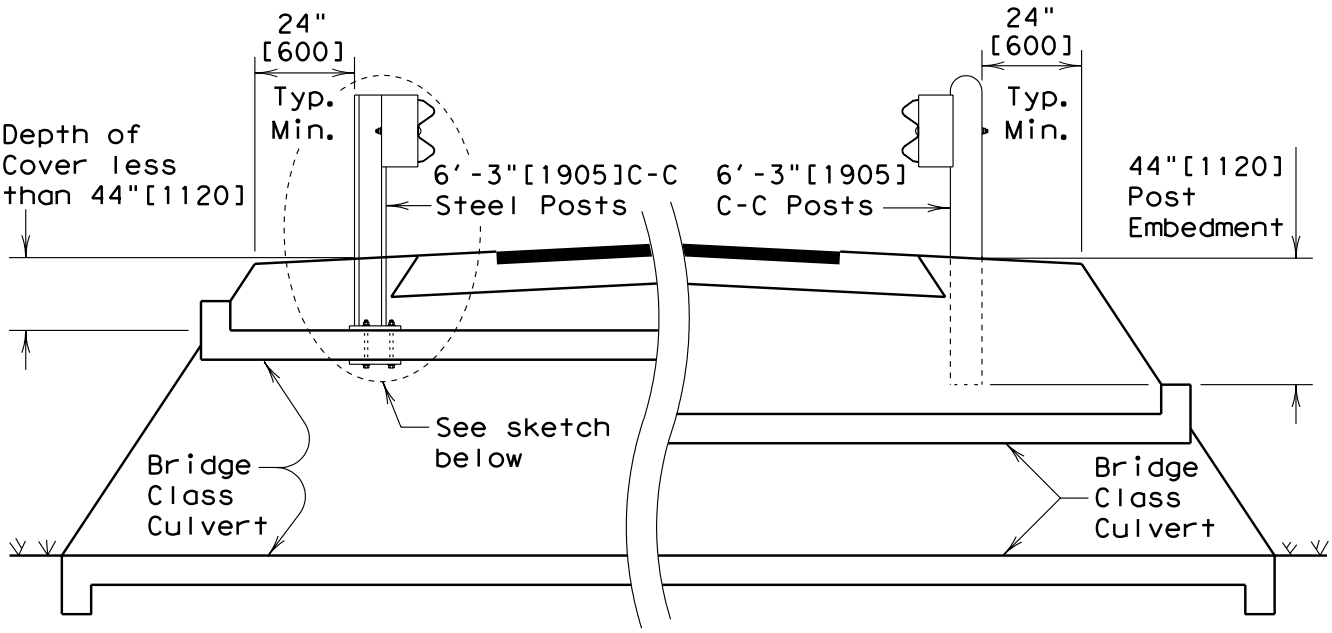

BRIDGE CLASS CULVERTS SHIELDED WITH GUARDRAIL

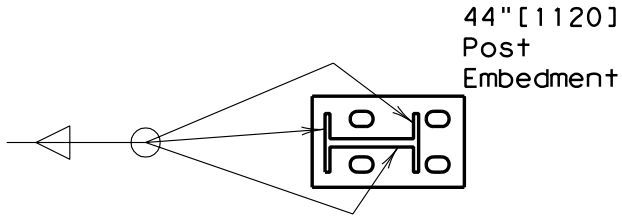

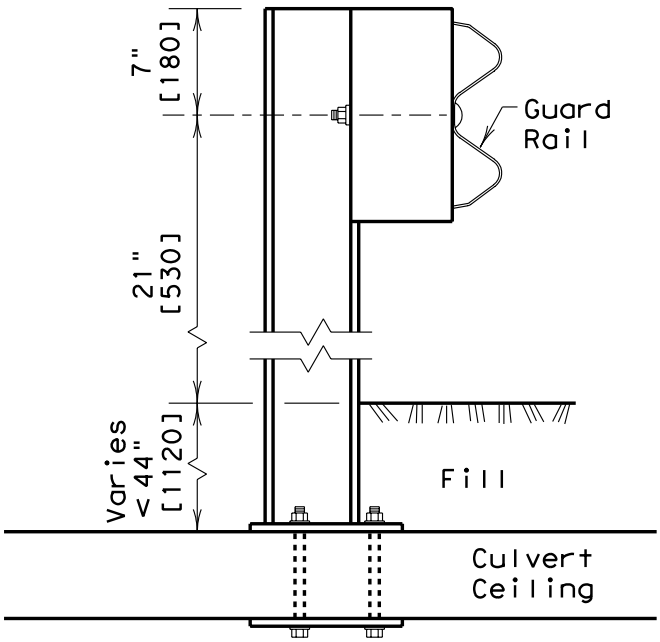

Note: See Standard Sheet for Mounting Details

All unit-less dimensions are millimeters

USE OF GUARDRAIL ON BRIDGE CLASS CULVERTS